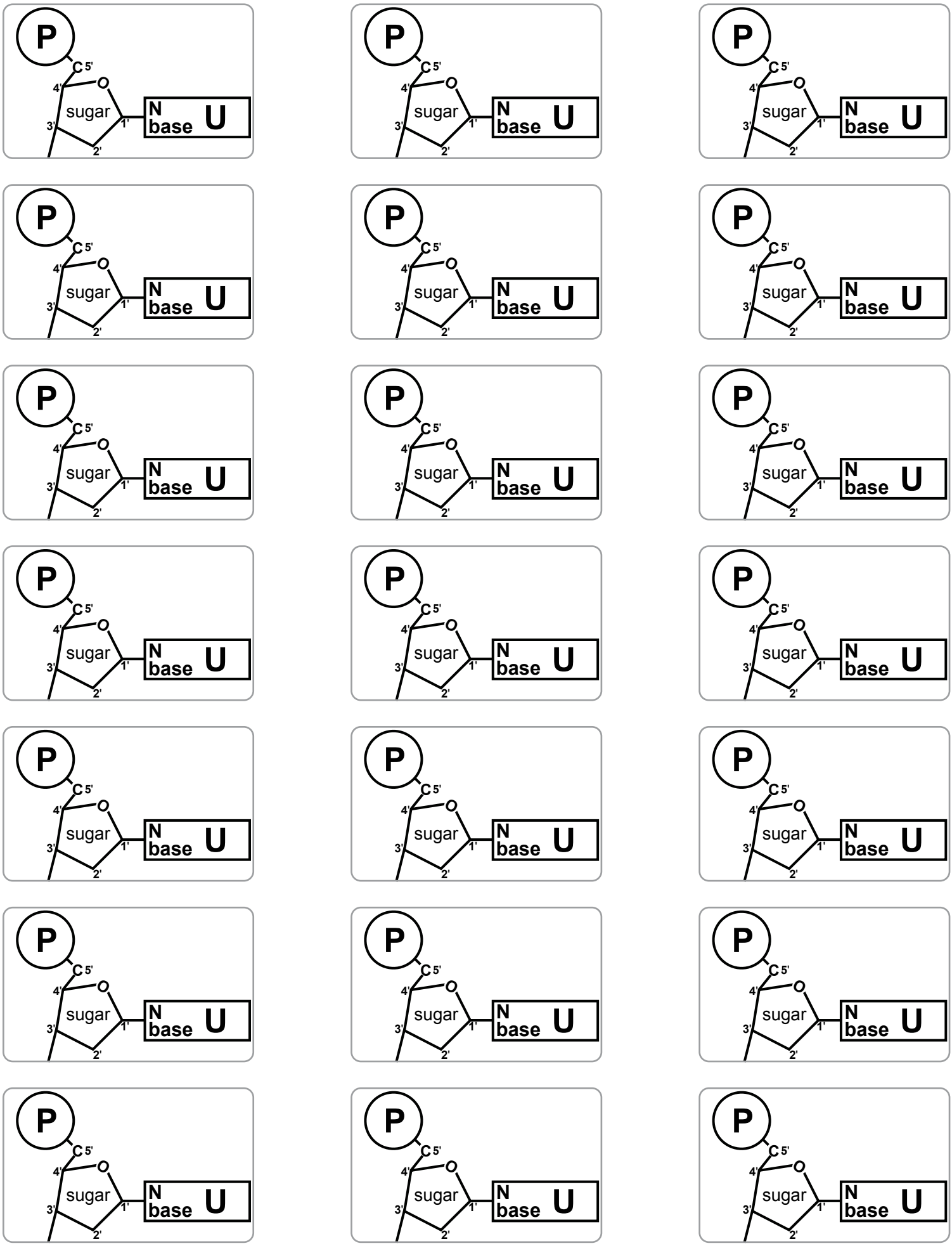
P
C 5'
O
4'
sugar
3'
1'
2'
N
base
U